KYOCERA

CMOS/ 3.0V Typ./ 3.2×2.5mm

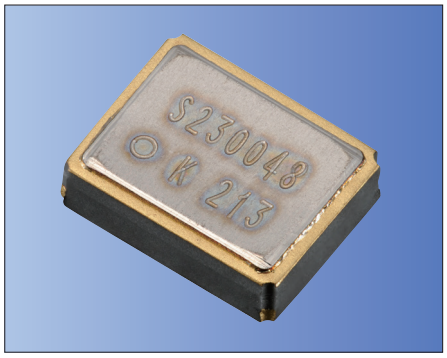

AEC-Q200 RoHS Compliant

Features

- Miniature SMD type (3.2×2.5×1.0mm)
- Built-in 32.768kHz D-TCXO
- I²C-BUS serial interface type : 400kHz high speed type
- Frequency selection function : 32.768kHz, 1024Hz, 32Hz, 1Hz
- Voltage detection function : 2.0V temp. compensated voltage detection 1.5V Low Voltage Detection
- Various functions including full calender, alarm and timer
- Operating Temp. −40 to +105°C (option)

Applications

- High accuracy time references

How to Order

Frequency Tolerance (vs Temp.) : ±3.8×10⁻⁶/ −10°C to 60°C

KR3225Y 32768 D G R □□ T xx
① ② ③ ④ ⑤ ⑥ ⑦ ⑧

Frequency Tolerance (vs Temp.) : ±5.0×10⁻⁶/ −40°C to 85°C

KR3225Y 32768 E A W □□ T xx
① ② ③ ④ ⑤ ⑥ ⑦ ⑧

① Series
② Output Frequency
③ Frequency Stability
④ Lower Temperature
⑤ Upper Temperature

	③	④	⑤
DGR	±3.8×10⁻⁶	−10°C	+60°C
EAW	±5.0×10⁻⁶	−40°C	+85°C

⑥ Supply Voltage

30	3.0V
33	3.3V
50	5.0V

⑦ Initial Frequency Tolerance

T	±3.0×10⁻⁶

⑧ Individual Specification
Packaging (Tape & Reel 3000 pcs./ reel)

Specifications

Item	Symbol	Conditions	Specification Min.	Typ.	Max.	Unit
Nominal Frequency	f_nom		—	32.768	—	kHz
Time Keeping Voltage	VDD	—	1.3	3.0	5.5	V
Temperature Compensation Voltage	VTEM	—	2.0	3.0	5.5	V
Interface Voltage	VINT	—	1.5	3.0	5.5	V
Operationg Temperature Range	T_use	No condensation	−40	+25	+85	°C
Frequency Stability vs. Temp.	fo-Tc	E:Ta=−40 to +85°C	−5.0	—	+5.0	×10⁻⁶
Start up Time	t_str	Ta=25°C	—	—	1.0	sec
		Ta=−40 to +85°C	—	—	3.0	sec
Power Supply Current1	ICC1	SCL=SDA=/INT=VDD, CLKOE=Vss CLKOUT Non-operating output VDD=3V	—	0.6	2.0	μA
Power Supply Current2	ICC2	SCL=SDA=/INT=VDD, CLKOE=VDD CLKOUT output 32.768kHz, VDD=3V Output at no load	—	1.5	4.0	μA
		SCL=SDA=/INT=VDD, CLKOE=VDD CLKOUT output 32.768kHz, VDD=3V CL=15pF	—	2.7	5.5	μA
Low Voltage Detection Voltage	VDET		1.3	1.4	1.5	V

* Please contact us for other specifications.

Pin Functions

Pin Name	I/ O	Function
CLKOE	I	Input to control the output mode of the CLKOUT
/ INT	O	Outputs for alarm signals, timer signals, timer update signals and other signals
Vss	—	Pin connected to ground
CLKOUT	O	32.768kHz signal output (CMOS output)
SCL	I	Serial clock input for I²C BUS communications
SDA	I/ O	Serial data input output for I²C BUS communications
VDD	—	This pin is connected to a positive power supply

Block Diagram

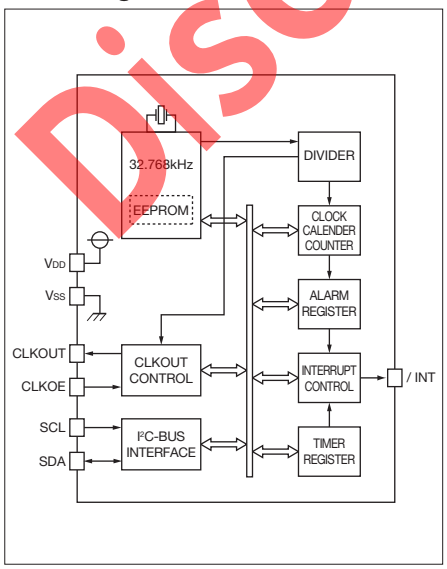

Dimensions

(Unit: mm)

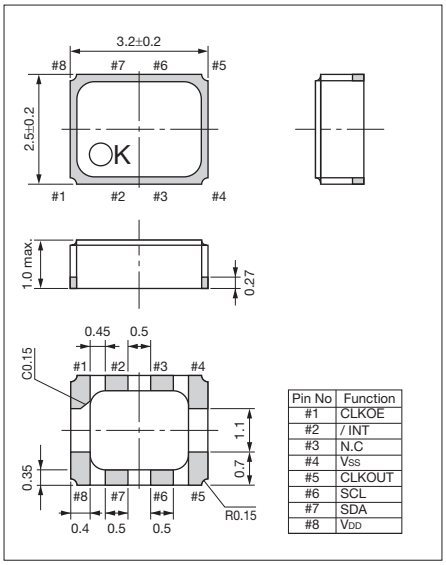

Pin No	Function
#1	CLKOE
#2	/ INT
#3	N.C
#4	Vss
#5	CLKOUT
#6	SCL
#7	SDA
#8	VDD

Recommended Land Pattern

(Unit: mm)

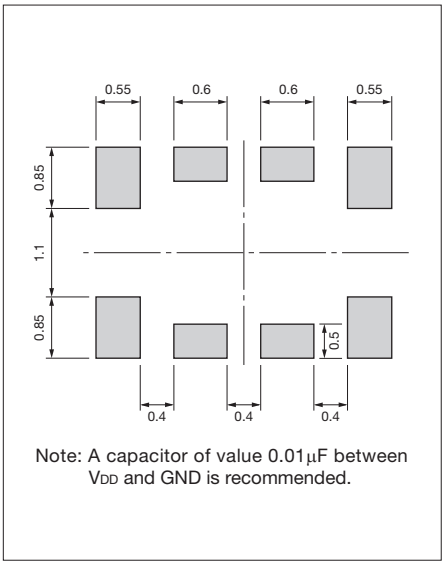

Note: A capacitor of value 0.01μF between VDD and GND is recommended.

Discontinued Product