Temperature Compensated Crystal Oscillators (TCXO)

Find TCXO Here

Surface Mount Type TCXO **KT2016K Series** (Low Phase Noise, With Disable Function) 2.0 × 1.6mm

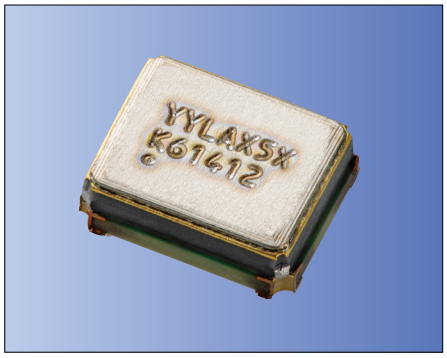

AEC-Q200 PSL: R4Y

RoHS Compliant MSL1

Features

- Miniature SMD type (2.0 × 1.6 × 0.8mm)
- Low Phase Noise : − 164dBc/ Hz@100kHz offset, 52MHz
- With Disable Function
- Freq. temp. characteristics. : ± 2.0 × 10^{-6}/ − 30 to +85° C : ± 0.5 × 10^{-6}/ − 30 to +85° C (for GNSS)
- 1.68 to 3.63V drive available
- Reflow compatible
- Operating Temp. − 40 to +105° C (Option)

Applications

- Consumer Products
- Automotive (ITS, IVI, Car Navigation, Infotainment etc.)
- Wireless Comm. (Mobile Communications, Wireless modules, GNSS Unit, Wi-Fi 6 (IEEE802.11ax))
- Industrial Equipment (Networking equipments)

How to Order

KT2016K 26000 □ □ □ □□ N x G

① ② ③ ④ ⑤ ⑥ ⑦ ⑧ ⑨

① Series

KT2016K	2016 Size

② Output Frequency

③ Freq. Temp. Chrst.

A	± 0.5 × 10^{-6}
B	± 1.0 × 10^{-6}
C	± 1.5 × 10^{-6}
D	± 2.0 × 10^{-6}

④ Lower Operating Temp.

C	− 30° C
E	− 20° C
G	− 10° C

⑤ Upper Operating Temp.

W	+85° C
V	+80° C
U	+75° C

⑥ Supply Voltage

18	1.8V	28	2.8V
30	3.0V	33	3.3V

⑦ Disable Function

N	With Disable Function

⑧ Individual Specification

⑨ Low Phase Noise Type

F/G	Low Phase Noise

Packaging (Tape & Reel 18000 pcs./ reel)

Specifications

Item	Symbol	Conditions	Min.	Max.	Units
Output Frequency Range	fo	Standard Output Frequency: 19.2 / 26.0 / 38.4 / 48.0 / 52.0 / 60.0	19.2	60.0	MHz
Frequency Tolerance	$f_{_tol}$	vs Temperature	− 0.5/ − 2	+0.5/ +2	× 10^{-6}
		vs Load	− 0.1	+0.1	
		vs Voltage	− 0.1	+0.1	
Frequency Aging	$f_{_age}$	Per Year	− 1	+1	× 10^{-6}
Storage Temperature Range	$T_{_stg}$		− 40	+85	° C
Operating Temperature Range	$T_{_use}$		− 30	+85	° C
Supply Voltage	Vcc		1.68	3.63	V
Output Level	Vpp	Clipped Sine*, Load: 10k ohm / / 10pF	0.8	—	Vp − p
Current Consumption	Icc		—	5.6	mA
Harmonics	—		—	− 5	dBc

* : A DC-cut capacitor is not embedded in this crystal oscillator. Connect a DC-cut capacitor (≥ 1nF) to the line-out terminal of the oscillator.
* Please contact us for other specifications.

Dimensions (Unit: mm)

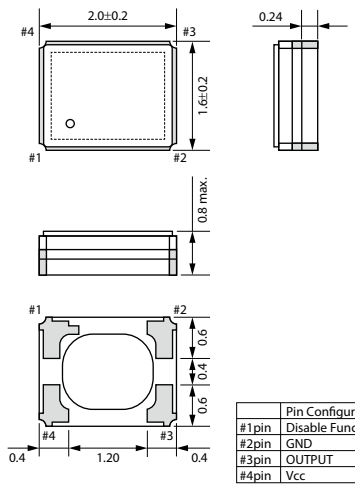

	Pin Configuration
#1pin	Disable Function
#2pin	GND
#3pin	OUTPUT
#4pin	Vcc

Test Circuit

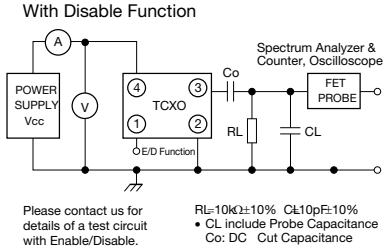

Recommended Land Patter (Unit: mm)

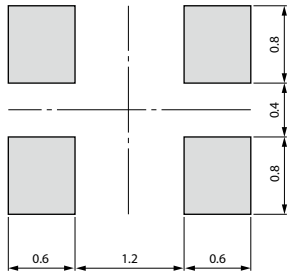

Note: 0.01μF capacitor between Vcc and GND is recommended for bypass purpose.