NO.	DESCRIPTION	PART NO.	QTY	MATERIAL	DRW NO.	REMARKS
1	PLUG INSULATOR		1	PA66		UL94V-0
2	POST CONTACT		N	BRASS		Sn リフロー, φ0.6

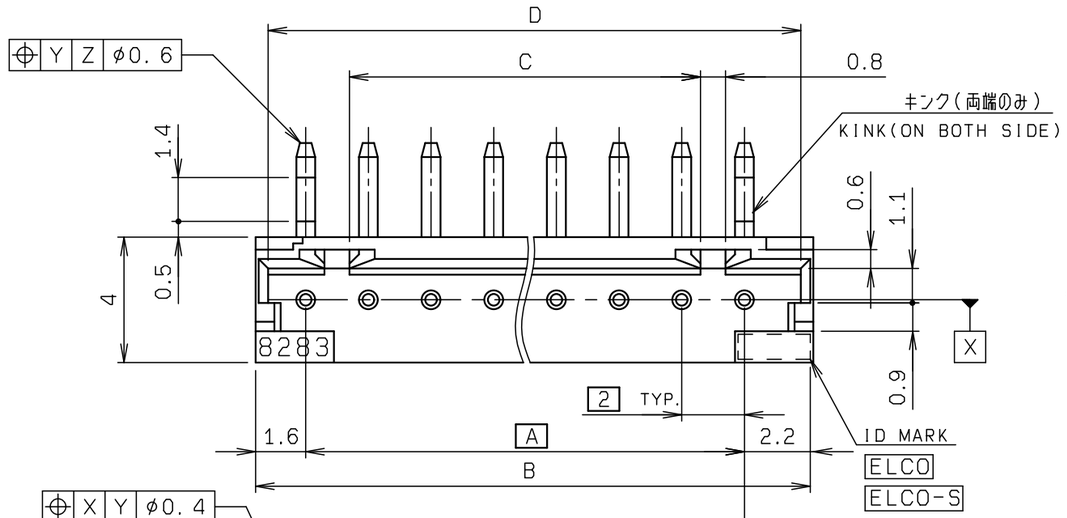

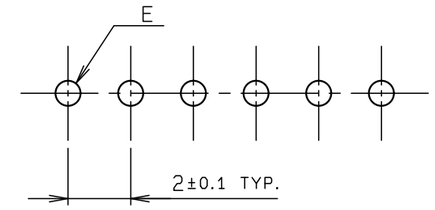

(公差非累積)
(NON-ACCUMULATIVE TOLERANCE)

推奨基板寸法 (板厚 ; 1.2又は1.6)

MOUNTING LAYOUT (T.H.K;t=1.2 OR 1.6)

基板穴径 P.W.B HOLE		
E	パンチ穴 PUNCH HOLE	ドリル穴 N.C HOLE
	$0.7^{+0.1}_{0}$	$0.8^{+0.1}_{0}$

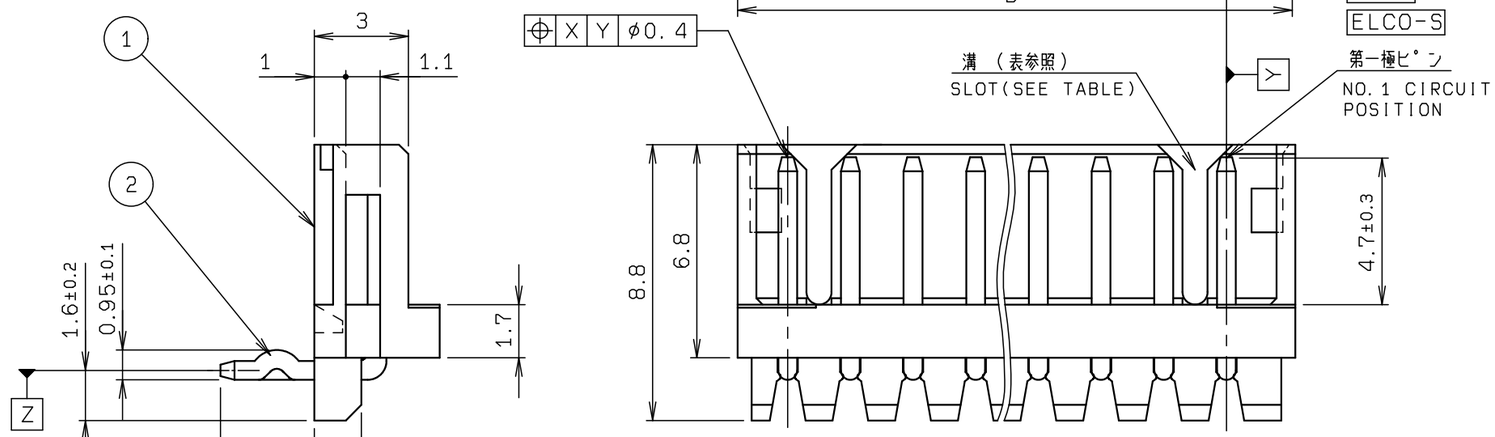

型番 P/N

00 8283 XX11 00 XXX K +

シリーズ NO. SERIES NO.

極数 NO. OF POS.

色調 COLOR

000:自然色 NATURAL　004: 茶 BROWN
001:黒 BLACK　005: 緑 GREEN
002:赤 RED　006: 青 BLUE
003:黄 YELLOW

KESP製 鉛フリー品

極数 NO. OF POS	A	B	C	D	溝位置 SLOT POSITION
2	2.0	5.8	——	5.0	1&2
3	4.0	7.8	——	7.0	2
4	6.0	9.8	3.2	9.0	1&2, 3& 4
5	8.0	11.8	5.2	11.0	1&2, 4& 5
6	10.0	13.8	7.2	13.0	1&2, 5& 6
7	12.0	15.8	9.2	15.0	1&2, 6& 7
8	14.0	17.8	11.2	17.0	1&2, 7& 8
9	16.0	19.8	13.2	19.0	1&2, 8& 9
10	18.0	21.8	15.2	21.0	1&2, 9&10
11	20.0	23.8	17.2	23.0	1&2, 10&11
12	22.0	25.8	19.2	25.0	1&2, 11&12
13	24.0	27.8	21.2	27.0	1&2, 12&13
14	26.0	29.8	23.2	29.0	1&2, 13&14
15	28.0	31.8	25.2	31.0	1&2, 14&15

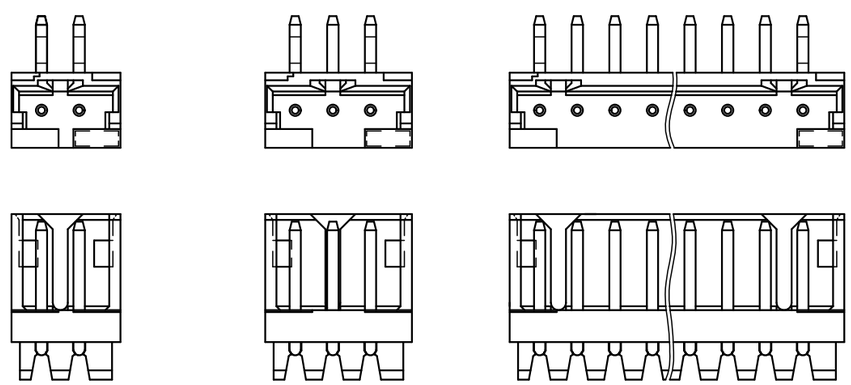

2P　3P　4~15P

ROHS規制対応
COMPLIANT WITH
RoHS REGULATIONS

TOLERANCE / 一般公差(S)

X <10 ±0.2
10≦ X <30 ±0.25
30≦ X ±0.3

ANGLE / 角度 ±3°

PRODUCT SPEC / 製品規格

UNIT mm　ANGLE 3RD

SCALE NTS　DATE 2004/11/05

DRAWN LI　DESIGNED M. SASAKI　CHECKED Y. SHIROYAMA　APPROVED N. HAYASHI

NO.	EDN/DCN	DATE	ISSUE	CHECKED	APPROVED
A	DCN19953	2019/09/18	R. ARAI		M. YOSHIDA
0	EDN-1181	2004/11/05	M. SASAKI	Y. SHIROYAMA	N. HAYASHI

PART NAME / 品名
SERIES 8283
PLUG ASSY RA DIP

PART NO. / 型番
00 8283 XX11 00 XXX K +

DWG NO. / 図番
BJS 8283136

SHEET 1/1　REV A

KYOCERA

© 2019 KYOCERA Corporation