NO.	DESCRIPTION	PART NO.	QTY	MATERIAL	DRW NO.	REMARKS
1	PLUG INSULATOR		1	PA66		UL94V-0
2	CONTACT		N	BRASS		φ0.6 Sn-Pb

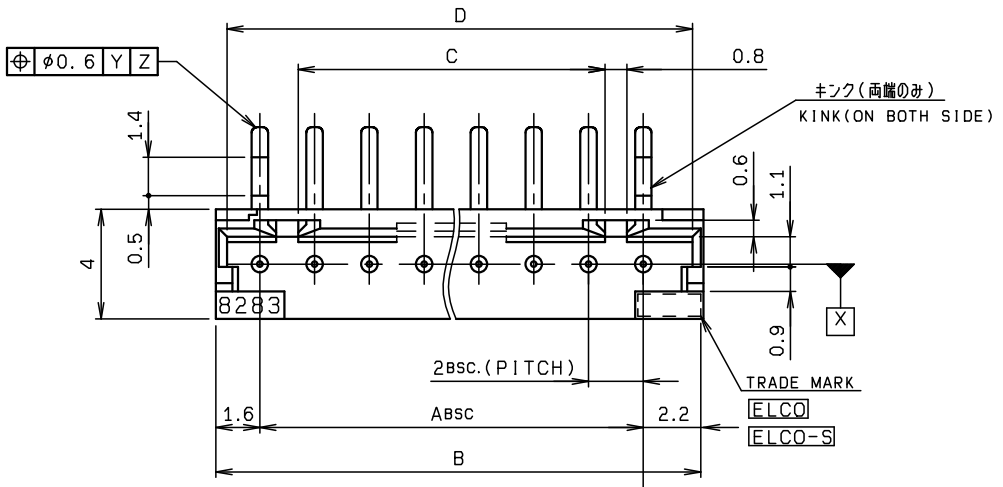

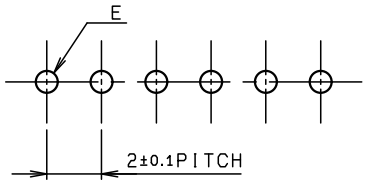

(NON-ACCUMULATIVE TOLERANCE)
(公差非累積)

MOUNTING LAYOUT (T.H.K:t=1.2 OR 1.6)
推奨基板寸法 (板厚 ; 1.2又は1.6)

基板穴径 P.W.B HOLE		
E	パンチ穴 PUNCH HOLE	ドリル穴 N.C HOLE
	$0.7^{+0.1}_{-0}$	$0.8^{+0.1}_{-0}$

型番
P/N 00 8283 XX11 00 XXX

シリーズ NO. SERIES NO.
極数 NO. OF POS.
色 COLOR
000:自然色 NATURAL
001:黒 BLACK
002:赤 RED
003:黄色 YELLOW

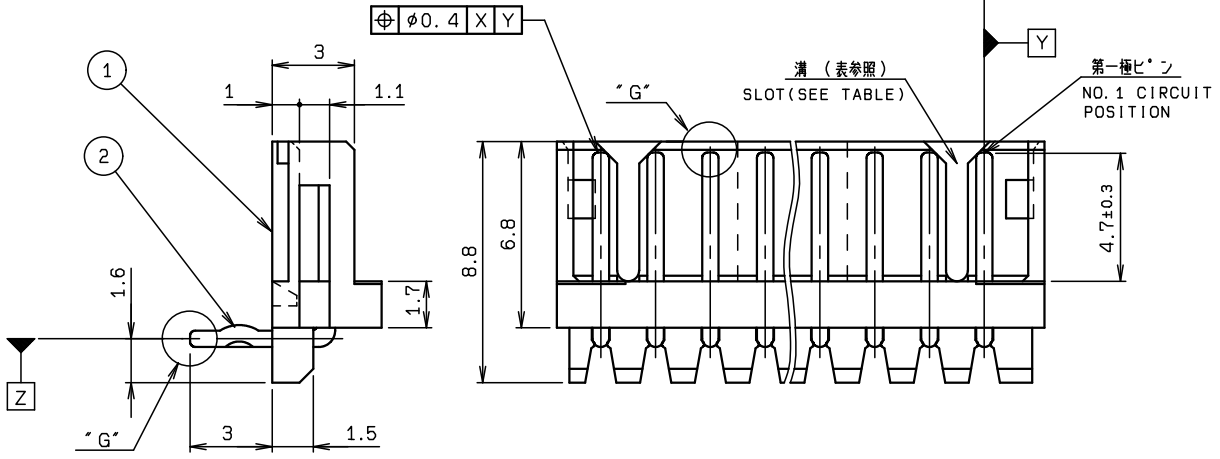

極数 NO. OF POS.	A	B	C	D	溝位置 SLOT POSITION
2	2	5.8	——	5	1&2
3	4	7.8	——	7	2
4	6	9.8	3.2	9	1&2, 3& 4
5	8	11.8	5.2	11	1&2, 4& 5
6	10	13.8	7.2	13	1&2, 5& 6
7	12	15.8	9.2	15	1&2, 6& 7
8	14	17.8	11.2	17	1&2, 7& 8
9	16	19.8	13.2	19	1&2, 8& 9
10	18	21.8	15.2	21	1&2, 9&10
11	20	23.8	17.2	23	1&2,10&11
12	22	25.8	19.2	25	1&2,11&12
13	24	27.8	21.2	27	1&2,12&13
14	26	29.8	23.2	29	1&2,13&14
15	28	31.8	25.2	31	1&2,14&15

DETAIL "G"

N	DCN-972	7-15-04			
M	DCN-039	1-14-03	H. IKARI		S. HARADA
A	EDN-2-004	3-02-82	K. SAWAKUMA		M. AOKI
NO.	EDN/DCN	DATE	ISSUE	CHECKED	APPROVED

MATERIAL / 材質: ——
PRODUCT SPEC / 製品規格: ——
FINISH / 仕上げ: ——
TOLERANCE / 一般公差: ±0.25

UNIT	ANGLE	SCALE	DATE
mm	3RD	NTS	5-18-93

DRAWN	DESIGNED	CHECKED	APPROVED
Y. OHISHI	K. SAWAKUMA		R. KAMEOKA

PART NAME / 品名: SERIES 8283 PLUG ASSY RA
PART NO. / 型番: 00 8283 XX11 00 XXX
DWG NO. / 図番: BJS 8283003
SHEET 1/1 REV N

KYOCERA Corporation