NO.	DESCRIPTION	PART NO.	QTY	MATERIAL	DRW NO.	REMARKS
1	INSULATOR		1	6-6NYLON		

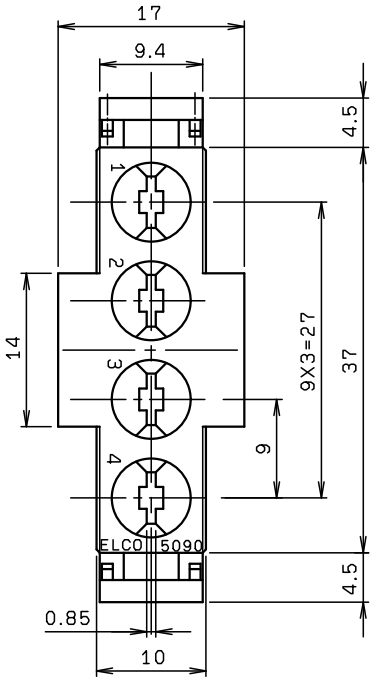

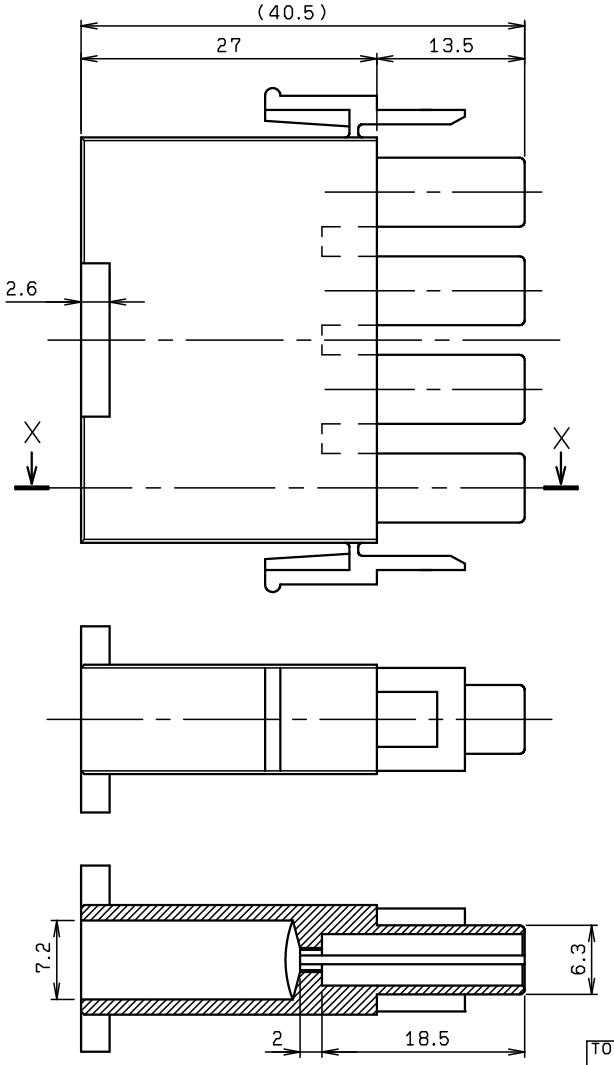

SECT X-X

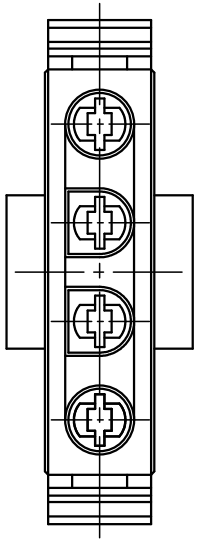

仕様 SPECIFICATION	
定格電流 CURRENT RATING	30A MAX.
定格電圧 VOLTAGE RATING	AC 600V r.m.s
耐電圧 DIELECTRIC WITHSTANDING VOLTAGE	AC 5000V r.m.s(1 min.)
絶縁抵抗 INSULATION RESISTANCE	1000MΩ MIN.
インシュレータ材質 INSU. MATERIAL	6-6 NYLON UL94V-0

RoHS規制対応
COMPLIANT WITH
RoHS REGULATIONS

TOLERANCE / 一般公差(S): ±0.3

PRODUCT SPEC / 製品規格: ——

UNIT: mm

ANGLE: 3RD

SCALE: 2 : 1

DATE: 1996/11/14

DRAWN	DESIGNED	CHECKED	APPROVED
K. SUZUKI	T. TATEDA	O. MIZUGUCHI	M. AOKI

NO.	EDN/DCN	DATE	ISSUE	CHECKED	APPROVED
A	DCN19622	2019/10/15	K. MIYAMOTO		M. YOSHIDA
0	EDN-554	1996/11/14	T. TATEDA	O. MIZUGUCHI	M. AOKI

PART NAME / 品名: SERIES 5090 POWER CONNECTOR 4P WIRE TYPE PLUG INSULATOR

PART NO. / 型番: 60 5090 304 108 000

DWG NO. / 図番: BJS 5090608

SHEET: 1/1

REV: A

KYOCERA

© 2019 KYOCERA Corporation